Medical Engineering & Physics 34 (2012) 1041–1048

Contents lists available at SciVerse ScienceDirect

Medical Engineering & Physics

journal homepage: www.elsevier.com/locate/medengphy

Rigid versus flexible plate fixation for periprosthetic femoral fracture—Computer modelling of a clinical case

Mehran Moazen[a,*], Alison C. Jones[a], Andreas Leonidou[a], Zhongmin Jin[a,b], Ruth K. Wilcox[a], Eleftherios Tsiridis[c,d,e]

[a] Institute of Medical and Biological Engineering, School of Mechanical Engineering, University of Leeds, Woodhouse Lane, Leeds LS2 9JT, UK
[b] Institute of Advanced Manufacturing Technology, School of Mechanical Engineering, Xi'an Jiaotong University, Xi'an 710049, PR China
[c] Academic Department of Orthopaedic and Trauma, Section of Musculoskeletal Disease, Institute of Molecular Medicine, School of Medicine, University of Leeds, Woodhouse Lane, Leeds LS2 9JT, UK
[d] Department of Surgery and Cancer, Division of Surgery, Imperial College London, B-block Hammersmith Hospital, Du-Cane Road, London W12 0HS, UK
[e] Academic Orthopaedic and Trauma Unit, Faculty of Medicine, Aristotle University Medical School, University Campus, 54 124 Thessaloniki, Greece

ARTICLE INFO

Article history:
Received 11 July 2011
Received in revised form 2 November 2011
Accepted 3 November 2011

Keywords:
Fracture fixation
Bone healing
Fracture movement
Finite element analysis
Biomechanics

ABSTRACT

A variety of plate designs have been implemented for treatment of periprosthetic femoral fracture (PFF) fixation. Controversy, however, exists with regard to optimum fixation methods using these plates. A clinical case of a PFF fixation (Vancouver type C) was studied where a rigid locking plate fixation was compared with a more flexible non-locking approach. A parametric computational model was developed in order to understand the underlying biomechanics between these two fixations. The model was used to estimate the overall stiffness and fracture movement of the two implemented methods. Further, the differing aspects of plate design and application were incrementally changed in four different models. The clinical case showed that a rigid fixation using a 4.5 mm titanium locking plate with a short bridging length did not promote healing and ultimately failed. In contrast, a flexible fixation using 5.6 mm stainless steel non-locking plate with a larger bridging length promoted healing. The computational results highlighted that changing the bridging length made a more substantial difference to the stiffness and fracture movement than varying other parameters. Further the computational model predicted the failure zone on the locking plate. In summary, rigid fracture fixation in the case of PFF can suppress the fracture movement to a degree that prevents healing and may ultimately fail. The computational approach demonstrated the potential of this technique to compare the stiffness and fracture movement of different fixation constructs in order to determine the optimum fixation method for PFF.

1. Introduction

Periprosthetic femoral fractures (PFF) can occur following total knee or total hip arthroplasty [1–5]. The management of these fractures is challenging due to the presence of the underlying prosthesis and, in some cases, poor quality of the remaining bone. Several plate designs with different configurations of locking and non-locking screws have been used in the management of these fractures, however there have been a number of reported failures, particularly of locking plates [6–9] which suggest that fractures have failed to heal.

Locking plates are intended to bridge the fracture site and promote secondary healing in the absence of perfect fracture reduction. To be successful they must satisfy two conflicting requirements of providing enough stability to allow the patient to partially bear weight, while being flexible enough to promote callus formation [10]. The plate must also remain intact and well fixed during and after the healing process. The aims of stability and flexibility can be characterised in a purely mechanical analysis as the stiffness of the whole bone-plate construct and the movement between the bone fragments at the site of the fracture [11].

Some of the key factors that affect the stiffness and fracture movement are the thickness and material properties of the plate, along with the design, positioning and number of the screws. Experimental and computational models have been developed to understand the effect of these parameters on the overall stiffness of long bone fracture fixation [12–15]. However, less consideration has been paid to the appropriate combination of these factors in the case of periprosthetic femoral fractures [16–18].

Computational models, based on finite element (FE) methods, have the potential to assess the mechanical performance of different fixation techniques [13,19]. These methods allow certain

* Corresponding author. Tel.: +44 (0) 113 34 32160; fax: +44 (0) 113 24 24611.
E-mail addresses: Mehran_Moazen@yahoo.com, M.Moazen@Leeds.ac.uk (M. Moazen).

1350-4533/$ – see front matter © 2011 IPEM. Published by Elsevier Ltd. All rights reserved.
doi:10.1016/j.medengphy.2011.11.007

aspects of the *in vivo* conditions to be replicated in a controlled manner so that the biomechanical effects of various parameters can be assessed both individually and in combination. However, the investigation of PFF fixation using computational methods has been limited [20].

This paper reports a recent clinical case on a periprosthetic fracture patient in which the initial fixation failed and was replaced by a second fixation which led to healing. A simplified parametric FE model was then used to investigate the mechanical effects of some of the key differences between the two constructs. In particular, the aim was to examine the relative effects of screw configuration, plate material, plate thickness and an aspect of screw-plate fixation, and determine if these factors could have had a role in the outcome of the two fixation cases.

2. Materials and methods

2.1. Clinical case

A 70 years old female Caucasian patient presented to emergency services with a spiral Vancouver type C periprosthetic femoral fracture below the tip of a total hip arthroplasty (see [21,22] for Vancouver classification). The prosthesis *in situ* was a reverse hybrid Corail stem (DePuy International Ltd., Warsaw, IN, USA) with a cemented polyethylenic acetabular component (Fig. 1A).

2.2. Polyaxial plate fixation

The initial periprosthetic fracture following the total hip arthroplasty (Fig. 1B) fixation was performed using a twelve hole 4.5 mm thickness, titanium femoral polyaxial plate (POLYAX plate, DePuy International Ltd., Warsaw, IN, USA). This locking plating system was fixed with nine 4.5 mm titanium locking screws proximally and four 5.5 mm screws distally in the femoral condyles (Fig. 1C). The fixation failed approximately 70 days later through a plate failure (Fig. 1D). The patient reported a twisting movement of her leg from the standing position that resulted in sudden pain onset and a subsequent domestic fall following which she was unable to stand and the lower limb was deformed.

2.3. Blade plate fixation

The re-fracture was revised by removing the broken polyaxial plate and using a sixteen hole 95°, 5.6 mm thickness, stainless steel condylar blade plate (Angled Blade Plate; Synthes, West Chester, PA). It should be noted that during revision surgery (performed by E. Tsiridis) no callus was identified between the bone fragments (personal observation). The non-locking plating system was fixed with six 4.5 mm stainless steel screws augmented by three cerclage wires proximally around the distal end of the hip prosthesis (Fig. 1E). Compression across the fracture was not achieved due to the femoral stem *in situ*.

The radiographs of the patient were analysed using image editing software CoralDRAW (Corel Corporation, Ottawa, ON). The fracture angle, fracture position, cortical thickness and femoral length were quantified based on the polyaxial plate size. These values were used as input parameters for the finite element model development, described in the next section.

2.4. Theoretical analysis

The aim of the theoretical analysis was to investigate the mechanical effects of some of the main differences in design between the two constructs presented in the clinical case using a finite element model. It should be emphasised that the purpose was not to build a patient-specific model to replicate the clinical case exactly, since insufficient data was available on the geometry and quality of the bone or loading at the time of fracture. Instead, a simplified model was used to comparatively evaluate the mechanical effects of four aspects that differed between the two plate designs: plate material, plate thickness, screw configuration and an aspect of the screw-plate fixation.

2.5. Model description

The model represented a constant diameter cortical shaft of uniform thickness, and included a cylindrical prosthesis stem spanning the length implanted into the femur [23–25]. The PFF was represented by an oblique fracture based on the measurements taken from the patient radiographs (Fig. 2). It was assumed that anatomic reduction of the bone at the fracture site was achieved and no fracture gap was included in the model, however, contact was modelled as described later.

A simplified representation of the proximal twelve holes of the fracture fixation plate was modelled as a uniform thickness plate with the spacing between holes based on the physical measurements of the polyaxial plate. The screws were modelled as cylinders with no screw thread or head and were tied to the plate and bone.

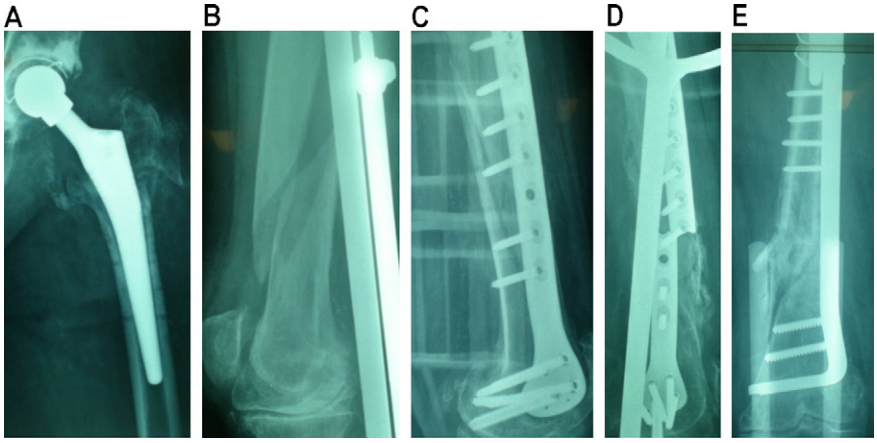

Fig. 1. A summary of the treatment procedure of the patient. (A) Anteroposterior radiograph following total hip replacement, (B) lateral radiograph showing Vancouver type C periprosthetic femoral fracture, (C) anteroposterior radiograph following initial polyaxial plate fixation, (D) lateral radiograph showing polyaxial plate failure approximately 70 days following fixation, (E) anteroposterior radiograph showing blade plate fixation.

A

Parameter	Value (mm)
L1	38.5
L2	155
L3	147.5
L4	42.5
R1	13.1
R2	18.3
K1	248
K2	4.5 or 5.6
K3	16
K4	0.5
r	4.5
d	17.3

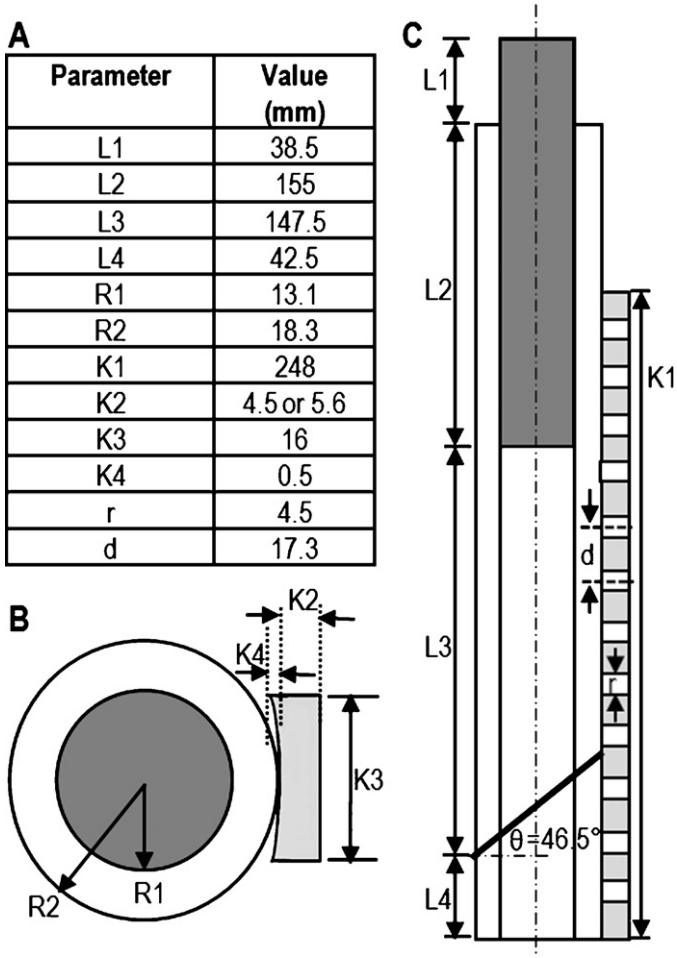

Fig. 2. (A) Summary of the parametric model dimensions, (B) and (C) showing the model parameters.

2.6. Material properties

All sections were assigned isotropic material properties with an elastic modulus of 20 GPa for the bone [24], 110 GPa for titanium [26] and 200 GPa for the steel [24,26]. A Poisson's ratio of 0.3 was used for all materials [26].

2.7. Interface conditions

In all of the models, the interfaces between the stem and bone and the screws and bone were fixed to prevent relative movement. In Models 1–5, the screw and the plate were also fixed at their contact surfaces in order to model the locking mechanism. This condition was altered to the penalty based contact condition with a frictional coefficient in Model 6 to assess the effect of increased movement between the screw and the plate. In order to assess the effect of the frictional coefficient at the screw–plate interface on the results, Model 6 was run with two different frictional coefficients of 0.3 in Model 6a and 0.9 in Model 6b.

Penalty based contact conditions were also specified at both the plate–bone interface and at the fracture site. The outputs of FE simulations of periprosthetic fracture fixation have been shown to be highly sensitive to the friction conditions at the fracture site [27]. In this study, a very low coefficient of friction (0.01) was used to simulate the 'worst case' before any healing has taken place. This value was kept constant throughout to ensure that like-for-like comparisons were made.

A

	Model					
Plate	1	2	3	4	5	6a,b
Material	titanium	titanium	titanium	steel	steel	steel
Thickness	4.5	4.5	4.5	4.5	5.6	5.6
Locking/non-locking	locking	locking	locking	locking	locking	non-locking
Screw fixation	1	2	3	3	3	3

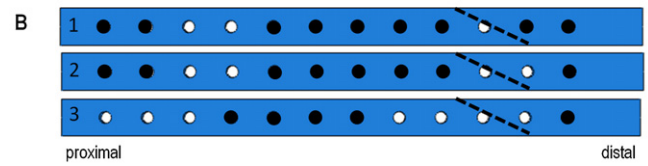

Fig. 3. (A) Summary of the models developed for this study, (B) showing the three screw fixation cases that were implemented in this study. Note that schematic plates in this figure have been rotated for the purpose of presentation, therefore left and right here represent the proximal and distal section anatomically.

A sensitivity analysis was undertaken on the plate–bone interface conditions and it was found that the model results were not sensitive to this coefficient of friction, which was varied in the range of 0–0.8, under the loading modes used in this study. A coefficient of friction of 0.3 was assigned at this interface which was similar to that found previously [28] for the interface between bone and titanium or stainless steel dynamic compression plates.

2.8. Boundary conditions and loads

Since the condylar section of the plate was not included, two sets of boundary conditions were analysed. In the first, both the distal end of the bone and the distal end of the plate were rigidly constrained ('bone and plate fixed'). Each test was then repeated with no restriction placed on the distal end of the plate, representing the opposite extreme of no fixation between plate and bone at the condyle ('bone fixed'). Both sets of boundary conditions were applied to all of the models to ensure that the relative effects of changing the plate features remained the same.

The proximal section of the prosthesis stem was loaded under two modes in this study. First, a force of 572.4 N was applied perpendicular to the femoral axis in the frontal plane and horizontally in the transverse plane to model bending. This approach was adopted based on the previous studies where the aforementioned load was calculated from five times an average body weight of 60 kg and applied at a loading angle of 11° corresponding to one legged stance [24,25]. Second, a torque of 35,000 Nmm was applied about the central axis of the stem to model torsion, based on the *in vivo* study of Kotzar et al. [29].

2.9. Mesh sensitivity

Tetrahedral (C3D4) elements were used to mesh all of the components. Convergence was tested by increasing the number of elements from 42,000 to 1,600,000 in five steps. The solution converged on the parameters of the interest (≤5%-for fracture movement, torsional and bending stiffness) with approximately 420,000 elements. Models with this number of elements or more were used for each of the cases presented.

2.10. Parametric study

Three configurations of screws were evaluated, as shown in Fig. 3. The first (Model 1) represented the fixation of the polyaxial plate in the clinical case, while the third (Model 3) had a longer fracture bridging length as was used in the blade plate fixation in the clinical case. Since the first model included a screw that bridged the fractured bone, which would over-constrain the fracture due

to the simplified fixed assumptions between screw and bone, an intermediate case where the screw bridging the fractured bone was removed, was also modelled (Model 2). The plate thickness and material were kept constant to represent that of the polyaxial plate, as shown in Fig. 3.

Using Model 3, a change in the material for the plate and screws from titanium to steel (Model 4) was made to represent the blade plate, followed by a change in plate thickness (Model 5). The fixed condition at screw–plate interface was removed to allow some movement at that interface (Models 6a and 6b). The alterations were undertaken in this order so that the changes in material and thickness were made on the model where they would likely have the greatest effect, that is, the one with the largest fracture bridging length.

2.11. Corroboration

The model described here was initially based on the model of total hip replacement (i.e. without plate and screws) reported in a study by Yoon et al. [24], who validated their computational predictions against experimental strain data. An indirect corroboration study was undertaken to verify the FE procedure described here against Yoon et al. [24] and similar results were found between the two studies.

2.12. Simulations and measurements

The models were solved and analysed using a finite element simulation package (ABAQUS v. 6.9, Simulia Inc., Providence, RI, USA). The bending and torsional stiffness of all seven models were calculated and compared. The bending stiffness was calculated by dividing the applied load by the predicted medial–lateral (horizontal) displacement. The torsional stiffness was calculated by dividing the applied torque by the predicted angular displacement [30]. The magnitude of the fracture movement was quantified by determining the relative displacements of the most distal point of the proximal fragment and the most proximal point of the distal fragment on the lateral and medial sides of the bone. The lateral measurements were taken under the fixation plate and the medial measurements on the opposite side to the plate.

3. Results—theoretical analysis

3.1. Effect of screw configuration

The predicted construct stiffness and fracture movement under the two loading modes for all of the models are shown in Fig. 4. When the screw configuration was altered from Model 1 to Model

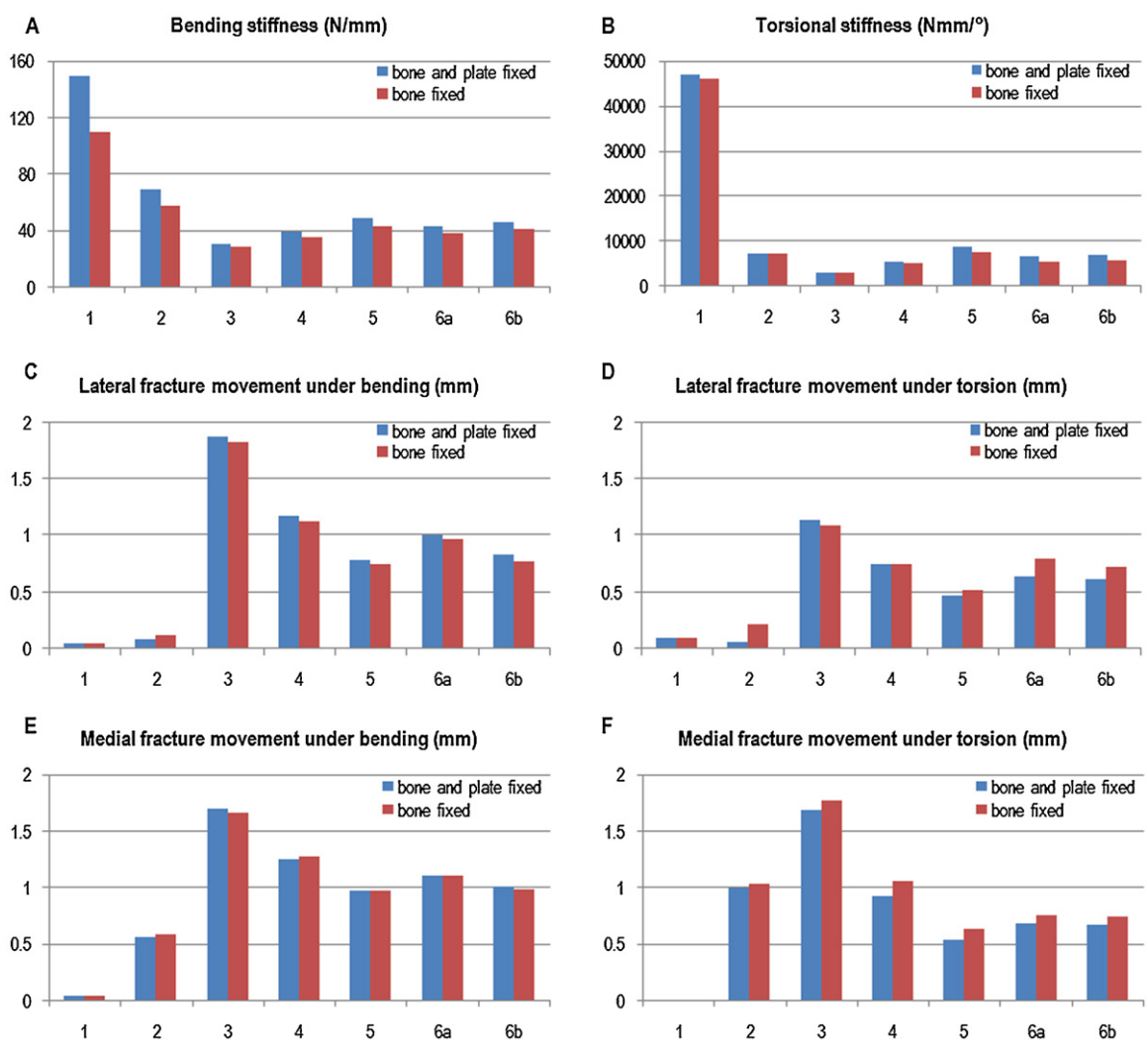

Fig. 4. (A) and (B) compare the bending and torsional stiffness of the models developed in this study. (C) and (D) compare the magnitude of the fracture movement between the bony fragments on the lateral and medial side. Note fracture movement under torsion on the medial side for Model 1 is 0.01 mm.

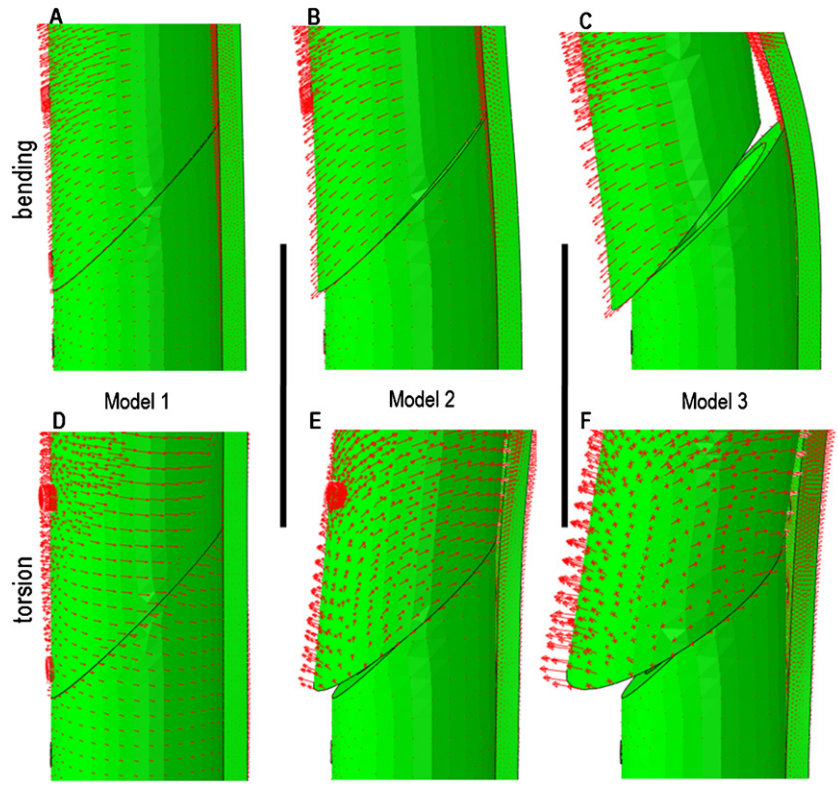

Fig. 5. A comparison of the Models 1–3 deflection under bending (A–C) and torsion (D–F). Note deflections are magnified three times.

3, there was a large decrease in stiffness (80% in bending, 93% in torsion). By discounting the effect of the screw which passes through the fracture site, and comparing Model 2 to Model 3, where only the bridging length was changed, there was a 57% reduction in both bending and torsional stiffness. There was also a large increase in fracture movement: on the lateral side, for example, there was 22 times more movement in bending and 19 times more in torsion.

The nodal displacements for Models 1–3 are shown in Fig. 5. The change in lateral fracture movement between Models 1, 2 and 3 was the aspect most substantially affected by the removal of the constraint on the distal end of the plate. Without distal support, a larger lateral fracture movement change was seen between Model 1 and Model 2. However, the overall trends were unaffected and Model 3 exhibited the lowest stiffness and highest fracture movement of all the scenarios studied, regardless of boundary conditions or loading regime.

3.2. Effect of plate material

The change in the material property of the plate and screws from titanium to steel (Model 4) increased the bending stiffness by 30% and torsional stiffness by 73%. There was a corresponding reduction in fracture movement of 37% in bending and 34% in torsion on the lateral side of the bone.

3.3. Effect of plate thickness

The change in the plate thickness (Model 5) had similar results, and led to a further increase in the bending stiffness by 25% and torsional stiffness by 62%. There was a corresponding reduction in fracture movement of 33% in bending and 36% in torsion on the lateral side of the bone.

3.4. Effect of movement at the screw–plate interface

Allowing movement between the screw and the plate (Model 6a) caused higher fracture movement on the lateral side (approximately 26% in bending, 34% in torsion), when compared to the rigidly fixed case (Model 5). There was also an increase in the fracture movement on the medial side (14% in bending, 27% in torsion), and a decrease in overall stiffness (13% in bending, 22% in torsion). Comparing Models 6a and 6b there was less than 5% difference between the two under torsional loading (with exception of lateral fracture movement under the 'bone fixed' condition, 9%). This difference was higher under bending with the maximum of difference being 19% for the lateral fracture movement under the 'bone fixed' condition.

3.5. Cumulative effect

Comparing Model 1 to Model 6a showed a reduction in bending and torsional stiffness of 72% and 85% respectively (Fig. 4A and B). There was also a considerable increase in fracture movement. On the lateral side, the movement was twenty times greater under bending and seven times greater under torsional loading. A similar range of differences was observed on the medial side (Fig. 4E and F).

Noteworthy, comparison of Model 1 to Model 5 showed a similar reduction in bending and torsional stiffness (67% and 81% respectively) to that of Model 1 and Model 6a.

3.6. Prediction of failure location

In the case replicating the polyaxial plate (Model 1), a peak in the von Mises stress was observed under torsional loading at a similar position to the point of failure *in vivo*, as can be seen in

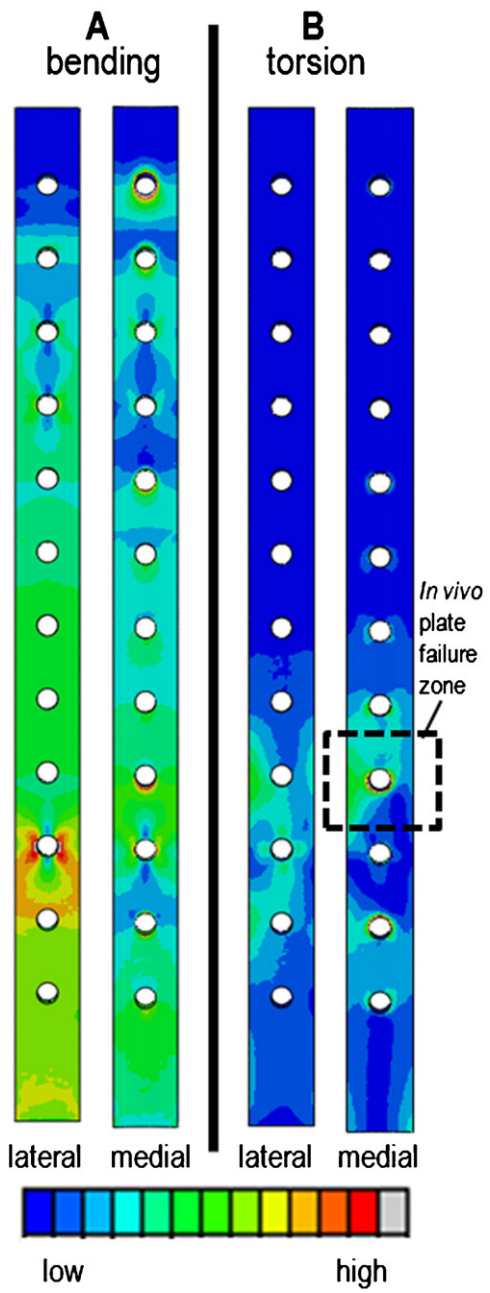

Fig. 6. von Mises stress distribution across Model 1 (which represented initial polyaxial plate fixation) under bending (A) and torsional (B) loading. Medial and lateral views of the plates are given for each loading case.

Fig. 6 compared to Fig. 1D. A region of high stress was also seen around the lateral side of the empty screw hole across the fracture site when the plate was subjected to bending. The location of these stress concentrations was not affected by changing the distal boundary conditions.

4. Discussion

The successful management of periprosthetic fractures presents a significant clinical and engineering challenge. This study highlighted one clinical case where the first plate fixation failed and the same fracture was later successfully treated with a different plate.

A parametric finite element modelling approach was used to understand the biomechanical differences between the two fracture fixation methods. The differing aspects of plate design and application were incrementally changed from one case to the other. These changes encompassed much of the range used clinically in each case. The resulting comparisons highlighted the factors that would be most likely to affect the construct stiffness.

The simplified FE model used in this study was not intended to be a direct simulation of the patient in the clinical case since there were inevitably too many unknown variables to build a patient-specific model. Instead a simplified model was constructed which allowed some of the aspects of the construct design to be evaluated in more depth than would be possible from simple beam theory calculations.

4.1. Limitations and corroboration

Considering the FE approach implemented in this study there were several limitations that need to be highlighted. (1) The stem–bone and screw–bone interfaces were fixed, whereas in reality micro-movement can be present. This assumption was kept the same between all the models to ensure the relative comparison between the cases was valid although the absolute values may not have been. (2) The screws heads were not explicitly modelled. While this assumption is reasonable in the case of the locking plates, caution must be taken in interpreting the results of Models 6a and 6b. The screw was also represented to fit exactly through the hole, so angular motion perpendicular to the screw shaft was more constrained than in reality, so these cases simply demonstrate the effect of increased movement in the direction of the screw shaft. (3) This study did not attempt to analyse the effect of the plate-bone compression possibly present in the blade plate fixation. This aspect could have increased the predicted stiffnesses for Models 6a and 6b. (4) A direct corroboration of the FE models with experimental *in vitro* models was beyond the scope of this study. However, an indirect corroboration study was undertaken to verify the FE procedure described here against Yoon et al. [24] in a model of total hip replacement (i.e. without plate and screws).

The fact that in Model 1, the plate under torsion exhibited a stress concentration in a similar location to the fracture in the clinical case provides some qualitative validation of the model predictions [31,32]. Further comparisons with published experimental data also show that the fracture movement and stiffness reported here are within the range reported experimentally [33,34], although there were some differences in the experimental set-ups. With these limitations in mind, the absolute values of stress were not reported in this study. Instead the aim was to make comparisons between the models studied, with some additional checks undertaken to ensure these were robust to the major unknowns in terms of the boundary conditions. Construct stiffness and fracture movements were studied but the emphasis was placed on the relative effects of the different construct parameters, rather than the values themselves.

4.2. Effect of screw configuration

Changing the configuration of the screws (Models 1–3), in isolation from any other aspect of the plating, provided a large reduction in stiffness. Contributing factors include an increase in the bridging length across the fracture site and ensuring that no screw passed through the two fragments of the fracture. Removal of the screw passing through the fracture site substantially decreased bending and torsional stiffness, implying that much of the stiffness of the initial polyaxial plate construct could have been due to this screw if it were fully engaged to the bone on both sides of the fracture. The removal of this screw increased fracture movement on the medial side of the bone but not on the lateral side. Only when the bridging length was increased further (i.e. Model 3) did the movement

increase in the whole fracture area (Fig. 5). Moreover, a comparison between Model 2 and Model 3 indicates that an increase in the bridging length to the extent that was ultimately used for the Blade plate could have led to a considerable increase in the fracture movement and reduction of the construct stiffness.

The trend of decreased fixation stiffness as a result of increased bridging length is consistent with the previous experimental studies of Ellis et al. [14] and Stoffel et al. [15] but in contrast with the computational studies of Duda et al. [35] and Chen et al. [26]. The work presented here replicates the early stage of fracture fixation where no healing has yet occurred, while the computational studies with contradictory results [26,35] included elements representing callus at the fracture site, which reduce the stresses in the plate.

4.3. Effect of plate material and thickness

Changing the plate material to steel and increasing the plate thickness both served to increase construct stiffness and reduce fracture movement (i.e. Models 4 and 5 versus Model 3). However both changes combined were insufficient to reverse the effects of changing the screw configuration.

A computational comparison of the two clinical cases indicated that the polyaxial plate fixation provided near absolute stability across the fracture site while the revised blade plate fixation provided a more flexible construct with some movement across the fracture. The polyaxial plate is intended to promote secondary bone healing, however, the stiffness of the polyaxial construct in this study could have suppressed the fracture movement necessary for secondary healing [11,36,37]. Equally, it is unlikely that primary healing would have been possible. As primary healing is not the intention of this plating regime, the necessary compression is unlikely to have been generated between the bony fragments.

4.4. Effect of movement at the screw–plate interface

Changing the screw fixation from locking mode to non-locking mode produced a reduction in overall construct stiffness and increase in fracture movement [33,38], although these variations were not nearly as substantial as those made by screw configuration changes. This provides some evidence that the screw configuration has more significant effects than the screw–plate interaction, as well as the material properties and plate thickness. However a model including more detailed screw geometry would be needed to confirm this.

4.5. Cumulative effect

In the clinical case, the revision blade plate fixation was seen to promote callus formation and eventually led to secondary bone healing. Computational results have confirmed that the blade plate provided greater movement at the fracture site, and shows that aiming for the maximum possible stiffness during internal fixation plating can be detrimental to healing [7,9,11,37]. This is despite the fact that blade plate (made of stainless steel and 5.6 mm thick) is a more rigid plate than the polyaxial plate (made of titanium and 4.5 mm thick) and the results here highlight the importance of the screw configuration in the overall construct behaviour.

Recently, Lujan et al. [39] showed a limited amount of callus formation under screw configuration similar to Model 3. This suggests that the window in which the stiffness of the fracture fixation would promote callus formation may be small, as well as being likely varied between patients [40]. Further research is required to gain a greater understanding of the relationship between construct stiffness and fracture healing, and to identify other factors which may influence that relationship. The *in vivo* environment will vary from patient to patient because of factors such as body weight, location and configuration of the fracture, bone quality and the capacity for bone healing.

A successful plate fixation system must promote bone healing while resisting fatigue failure and remaining firmly attached to the bone [26]. Patient-specific application of locking plates (such as choice of bridging length) may have as much influence on the clinical outcome as the design of the plates themselves.

The FE modelling approach has considerable potential to be developed to evaluate and optimise fixation systems, and could certainly be used to evaluate the risk of plate failure, taking into account these patient variables. However, a much greater level of sophistication would be necessary to accurately predict the fracture movement that would occur *in vivo* and the evaluation of the potential for bone healing remains a greater challenge.

5. Conclusion

Patient frailty, bone quality, and the presence of the prosthetic stem mean that the fixation of periprosthetic fractures is challenging. This paper used a simplified FE model to examine some of the major variants in construct design and their relative mechanical importance. This approach can identify which factors in plate design and use are most important, and provide a focus for future studies. From the results in this study, it is clear that screw configuration has a greater effect than plate material or thickness within the current clinical range. The results suggest that there would have been considerable mechanical differences between the two clinical cases, with the second blade fixation being less stiff which could have better promoted healing.

Combining the aspects of plating to achieve a level of fracture movement within the range which will promote healing remains a challenge and it is clear that much more realistic experimental and computational models must be developed if periprosthetic fracture fixation is to be optimised for a range of patient variables.

Acknowledgements

This work is supported by British Orthopaedic Association (BOA) through the Latta Fellowship. In addition, it was partially funded through WELMEC, a Centre of Excellence in Medical Engineering funded by the Wellcome Trust and EPSRC, under grant number WT 088908/Z/09/Z and additionally supported by the NIHR (National Institute for Health Research) as part of a collaboration with the LMBRU (Leeds Musculoskeletal Biomedical Research Unit).

Conflict of interest

The authors confirm that there is no conflict of interest.

References

[1] Kavanagh BF. Femoral fractures associated with total hip arthroplasty. Orthop Clin North Am 1992;23:249–57.
[2] Weber D, Peter RE. Distal femoral fractures after knee arthroplasty. Int Orthop 1999;23:236–9.
[3] Dennis DA. Periprosthetic fractures following total knee arthroplasty. J Bone Joint Surg Am 2001;83:120–30.
[4] Haddad FS, Duncan CP, Berry DJ, Lewallen DG, Gross AE, Chandler HP. Periprosthetic femoral fractures around well-fixed implants: use of cortical onlay allografts with or without a plate. J Bone Joint Surg Am 2002;84:945–50.
[5] Chakravarthy J, Bansal R, Cooper J. Locking plate osteosynthesis for Vancouver Type B1 and Type C periprosthetic fractures of femur: a report on 12 patients. Injury 2007;38:725–33.
[6] Sommer S, Babst R, Muller M, Hanson B. Locking compression plate loosening and plate breakage a report of four cases. J Orthop Trauma 2004;18:571–7.
[7] Buttaro MA, Farfalli G, Paredes Nunez M, Comba F, Piccaluga F. Locking compression plate fixation of Vancouver type-B1 periprosthetic femoral fractures. J Bone Joint Surg Am 2007;89:1964–9.

[8] Yukata K, Doi K, Hattori Y, Sakamoto S. Early breakage of a titanium volar locking plate for fixation of a distal radius fracture: case report. J Hand Surg Am 2009;34:907–9.
[9] Hak DJ, Toker S, Yi C, Toreson J. The influence of fracture fixation biomechanics on fracture healing. Orthopedics 2010;33(10):752.
[10] Egol KA, Kubiak EN, Fulkerson E, Kummer FJ, Koval KJ. Biomechanics of locked plates and screws. J Orthop Trauma 2004;18:488–93.
[11] Bottlang M, Lesser M, Koerber J, Doornink J, von Rechenberg B, Augat P, et al. Far cortical locking can improve healing of fracture stabilized with locking plates. J Bone Joint Surg Am 2010;92:1652–60.
[12] Perren SM. Physical and biological aspects of fracture healing with special reference to internal fixation. Clin Orthop 1979;138:175–96.
[13] Ferguson SJ, Wyss UP, Pichora DR. Finite element stress analysis of a hybrid fracture fixation plate. Med Eng Phys 1996;18:241–50.
[14] Ellis T, Bourgeault C, Kyle R. Screw position affects dynamic compression plate: strain in an in vitro fracture model. J Orthop Trauma 2001;15:333–7.
[15] Stoffel K, Dieter U, Stachowiak G, Gachter A, Kuster MS. Biomechanical testing of the LCP—how can stability in locked internal fixators be controlled? Injury 2003;34:S-B11–9.
[16] Schmotzer H, Tchejeyan GH, Dall DM. Surgical management of intra- and postoperative fractures of the femur about the tip of the stem in total hip arthroplasty. J Arthroplasty 1996;11:709–17.
[17] Zdero R, Walker R, Waddell JP, Schemitsch EH. Biomechanical evaluation of periprosthetic femoral fracture fixation. J Bone Joint Surg Am 2008;90:1068–77.
[18] Moazen M, Jones AC, Jin Z, Wilcox RK, Tsiridis E. Periprosthetic fracture fixation of the femur following total hip arthroplasty: a review of biomechanical testing. Clin Biomech (Bristol, Avon) 2011;26:13–22.
[19] Beaupre GS, Carter DR, Orr TE, Csongradi J. Stresses in plated long-bones: the role of screw tightness and interface slipping. J Orthop Res 1988;6:39–50.
[20] Mihalko WM, Beaudoin AJ, Cardea JA, Krause WR. Finite-element modelling of femoral shaft fracture fixation techniques post total hip arthroplasty. J Biomech 1992;25:469–76.
[21] Tsiridis E, Pavlou G, Venkatesh R, Bobak P, Gie G. Periprosthetic femoral fractures around hip arthroplasty: current concepts in their management. Hip Int 2009;19:75–86.
[22] Duncan CP, Masri BA. Fractures of the femur after hip replacement. Instr Course Lect 1995;44:293–304.
[23] Huiskes R. Stress analyses of implanted orthopaedic joint prostheses for optimal design and fixation. Acta Orthop Belg 1980;46:711–27.
[24] Yoon YS, Jang GH, Kim YY. Shape optimal design of the stem of a cemented hip prosthesis to minimise stress concentration in the cement layer. J Biomech 1989;22:1279–84.
[25] Gross S, Abel EW. Finite element analysis of hollow stemmed hip prostheses as a means of reducing stress shielding of the femur. J Biomech 2001;34:995–1003.
[26] Chen G, Schmutz B, Wullschleger M, Pearcy MJ, Schuetz MA. Computational investigation of mechanical failures of internal plate fixation. Proc Inst Mech Eng H 2010;224:119–26.
[27] Moazen M, Jones AC, Leonidou A, Jin Z, Tsiridis E, Wilcox RK. Periprosthetic femoral fracture fixation—a preliminary finite element study. In: Proceedings of the 9th Intl symposium of computer methods in biomechanics and biomedical engineering. 2010. ISBN 978-0-9562121-3-9.
[28] Hayes WC, Perren SM. Plate-bone friction in the compression fixation of fractures. Clin Orthop 1972;89:236–40.
[29] Kotzar GM, Davy DT, Berilla J, Goldberg VM. Torsional loads in the early postoperative period following total hip replacement. J Orthop Res 1995;13: 945–55.
[30] Papini M, Zdero R, Schemitsch EH, Zalzal P. The biomechanics of human femurs in axial and torsional loading: comparison of finite element analysis, human cadaveric femurs, and synthetic femurs. J Biomech Eng 2007;129:12–9.
[31] Viceconti M, Olsen S, Nolte LP, Burton K. Extracting clinically relevant data from finite element simulations. Clin Biomech (Bristol, Avon) 2005;20:451–4.
[32] Anderson AE, Ellis BJ, Weiss JA. Verification, validation, and sensitivity studies in computational biomechanics. Comp Meth Biomech Biomed Eng 2007;10:171–84.
[33] Koval KJ, Hoehl JJ, Kummer FJ, Simon JA. Distal femoral fixation: a biomechanical comparison of the standard condylar buttress plate, a locked buttress plate and the 95 degree blade plate. J Orthop Trauma 1997;11:521–4.
[34] Wilkens KJ, Curtiss S, Lee MA. Polyaxial locking plate fixation in distal femur fractures: a biomechanical comparison. J Orthop Trauma 2008;22: 624–8.
[35] Duda GN, Mandruzzato F, Heller M, Kassi J-P, Khodadadyan C, Haas CP. Mechanical conditions in the internal stabilization of proximal tibial defects. Clin Biomech (Bristol, Avon) 2002;17:64–72.
[36] Perren SM. Evolution of the internal fixation of long bone fractures. The scientific basis of biological internal fixation: choosing a new balance between stability and biology. J Bone Joint Surg Br 2002;84:1093–110.
[37] Claes LE, Wilke HJ, Augat P, Rubenacker S, Margevicius KJ. Effect of dynamization on gap healing of diaphyseal fractures under external fixation. Clin Biomech (Bristol, Avon) 1995;10:227–34.
[38] Higgins TF, Pittman G, Hines J, Bachus KN. Biomechanical analysis of distal femur fracture fixation: fixed-angle screw-plate construct versus condylar blade plate. J Orthop Trauma 2007;21:43–6.
[39] Lujan TL, Henderson CE, Madey SM, Fitzpatrick DC, Marsh JL, Bottlang M. Locked plating of distal femur fracture leads to inconsistent and asymmetric callus formation. J Orthop Trauma 2010;24:156–62.
[40] Henderson CE, Bottlang M, Marsh JL, Fitzpatrick DC, Madey SM. Does locked plating of periprosthetic supracondylar femur fractures promote bone healing by callus formation? Two cases with opposite outcomes. Iowa Orthop J 2008;28:73–6.